TMDE PROGRAM

Steven Makieil
(562) 626-7578
makieil.steven@sbeach.navy.mil

NAVSEA

NAVAL SEA SYSTEMS COMMAND

CHAIN OF COMMAND

Department

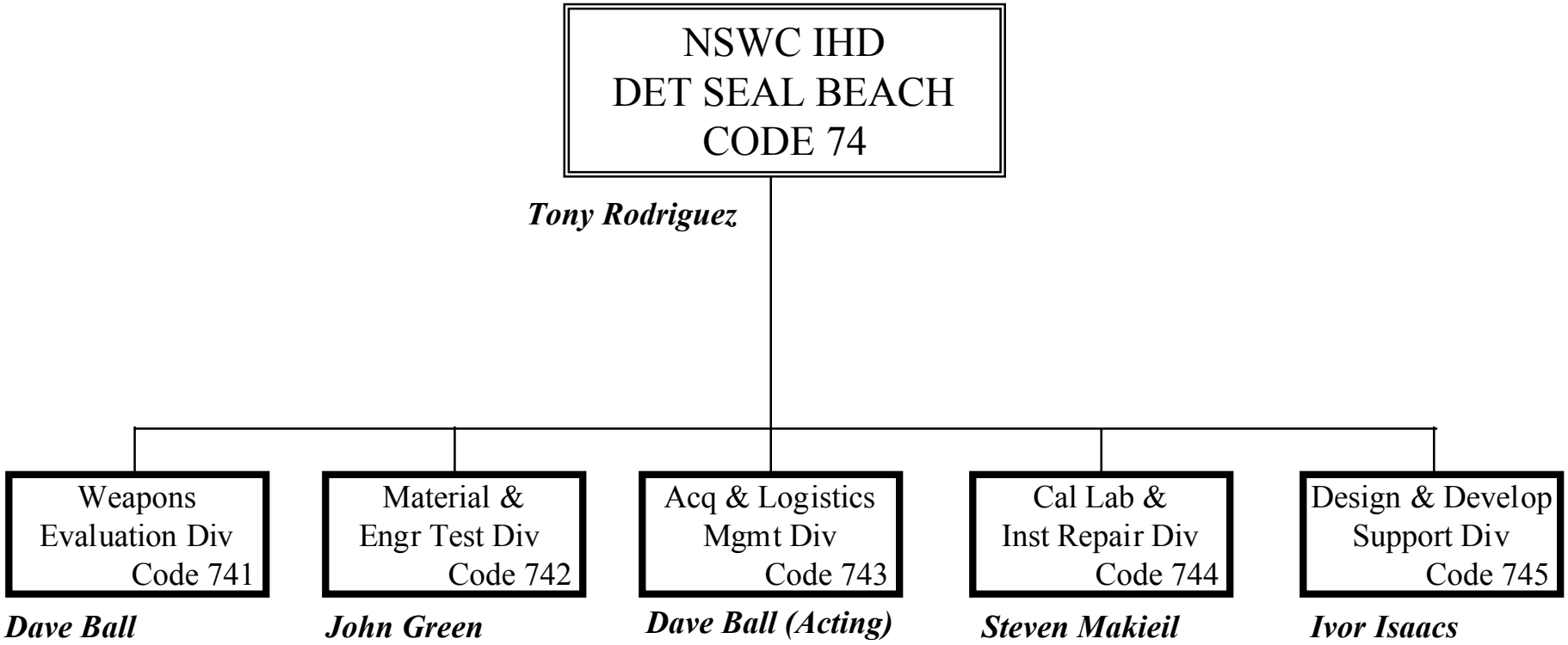

TMDE PROGRAM OVERVIEW

- **Identifies/Budgets/Procures Fleet & Shore GPETE**
- **Responsible for Comprehensive GPETE Life Cycle Support (Cradle to Grave)**

  (e.g. Production, Sustaining Support, Retirement)
- **Responsible for Comprehensive GPETE Logistics Support**

  (e.g. TM, Calibration, Supply Support, Training)

OUR PROGRAM ROLE

- **NAVSEA TMDE Engineering Support**
  - **PS Measurement Requirements**
  - **Field Engineering Support**
  - **Standardization**
  - **Obsolete and Substandard Technical Support**
  - **New Technology Application**

OUR PROGRAM ROLE

- **Measurement Requirements Assessment**
  - Review History File
  - Survey PS/E Maintenance Requirements
    - Preventive & Corrective
  - Gather PS/E Maintenance Requirements
    - ISEA, PM, TYCOM, & FTSCs
  - OP Eval & Field Qualification
  - Assess Industry Technology Options
  - Develop Industry Technology Matrix
  - Develop Measurement Requirements Specification

OUR PROGRAM ROLE

- **Fleet/Shore Calibration & Repair Support**
  - **Technology Foundation**
    - **Hands on TMDE Calibration Support**
    - **Hands on TMDE Repair Support**
  - **Certified Type III Calibration Lab**
    - **Electrical, Electronics, Microwave & Mechanical**
  - **Repair/Restoration Lab**
    - **GPETE/Cal Std/Special Purpose**
  - **Acceptance Testing**
- **Technical Compliance Support**
  - **MIL-PRF-28800F & Commercial TM**

OUR PROGRAM FOCUS

- **PS/E Maintenance Requirements Assessment**
  - **Fleet/Shore Experience Preferences:**
    - **PS/E ISEA & PM Preventive & Corrective Maintenance Requirements Perspective**
    - **TYCOM & FTSC Maintenance Perspective**

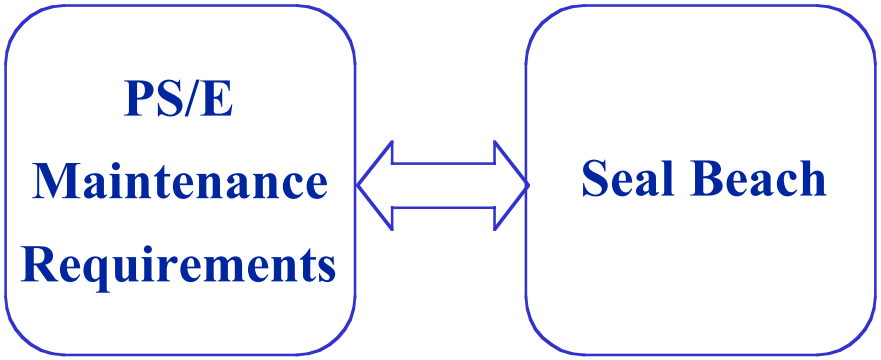

OUR TECHNOLOGY FOCUS

- **PS/E Measurement Capability/Solutions Assessment**
  - **Industry Technology/Measurement Solutions:**
    - ß **Measurement Discipline Options**
    - ß **Industry Instrumentation Options**

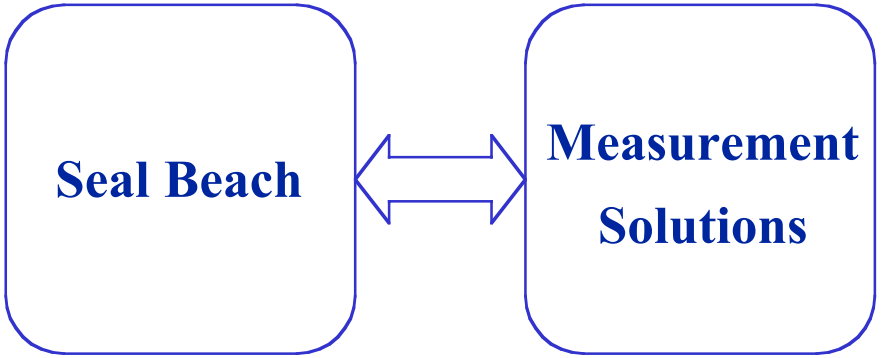

OUR TECHNOLOGY FOCUS

- **Technology Common Denominator**
  - PS/E Maintenance Requirements Interpretation
  - Measurement Capability Translation

OUR SUPPORT FOCUS

- **TMDE Requirements Determination**
  - **Priority Drivers**
    - **Battle Group Requirements**
    - **Deployment Schedules**
    - **Shore Technology & Logistics Infrastructure**
    - **PS/E Upgrades & Fleet Introductions**

OUR SUPPORT FOCUS

- **TMDE Requirements Determination (continued)**
  - Life Cycle Perspective
    - Reduce Model Proliferation
    - Implement TMDE Standardization & Orderly Replacement (ORTEC)
    - Reduce TMDE Obsolescence
    - Leverage Technology Growth
    - Acquisition Keyed to Industry Product Introductions

OUR SUPPORT FOCUS

- **TMDE Requirements Determination (continued)**
  - **Logistics Perspective**
    - **Field Proven Op/Tech Eval**
    - **Maintenance Strategy (Piece Part Level)**
    - **Comprehensive Logistics prior to Deployment**
    - **Managed Technology Introduction (School House First then the Fleet/Shore)**

OUR SUPPORT FOCUS

- **GPETE Acquisition Support**
  - Short Term Support (Annual Buy List)
    - SCAT Code Applications
    - PS/E Applications
  - Long Term Program Goals & Objectives
    - TMDE Standardization Evaluations
    - Support Technology Leverages for Orderly Replacement (ORTEC)

OUR SUPPORT FOCUS

- **SCAT Code Applications**
  - TMDE Identification (Obsolete or Substandard)
  - PS/E Maintenance Requirements Assessment
    - Fleet, FTSC, TYCOM, PM, & ISEA Review
  - TMDE Replacement Options Assessment
    - Review TMDE SCAT Options
    - Review DOD TMDE Options
    - Next Generation TMDE Competitive Acquisition
      - Update Measurement Requirements Specification
  - Notify TMDE Program
    - Model Application Change
  - Submit Request to update PS/E Maintenance Documentation
  - Estimated FY01 Cost Avoidance of $1.0M

OUR PROCESS FOCUS

- **Examples of Standard Model Substitutions**

Obsolete Model	SCAT	Nomenclature	Substitude Model	SCAT
1863	4448	Mega Ohmmeter	1864	4449
6154	4959	Wattmeter w/ Load	4410A500 & 8135	4958 & 4948
114A	4409	Pulse Generator	8114A-001	4409
145-S-872	4404	Function Generator	81N	4404
1644-A	4449	Mega Ohmmeter	1864	4449
211B	4416	Function Generator	81N	4404
5023A	4034	Logic Probe	P6401	4035
5315A	4293	Frequency Counter	53131A-010-030-H09	4296
6434B	4041	Power Supply	6012B-N01	4792
6500-1676	4266	Meter WOW+Flutter	LFM-39A	4266
77/BN	4245	Multimeter	77-III/BN	4245
8013B	4402	Pulse Generator	PM5712-08	4412
8757E-S21	4467	Scaler Analyzer	56100NV	4475
931B-01	4219	Multimeter	2001-M	4209
DT-207B	4270	Photo Tachometer	DT-207L	4270
MK30 MOD0	4069	Synchro Indicator	DSM-4	4073
MK33 MOD0	4068	Synchro Indicator	DSM-4	4073
P6046	4183	Differential Probe	FLK 199/AN	4312
T922-01	4304	Oscilloscope	54645A-E01	4308

- **Review of 65 SCATs – Reduce TMDE by 17 Models**

OUR PROCESS FOCUS

- **PS/E Application**
  - PS/E Requirements Identification (current, new, & upgrade)
  - Measurement Requirements Assessment
    - Fleet, FTSC, TYCOM, PM, & ISEA Review
  - TMDE Replacement Options Assessment
    - Review TMDE SCAT Options
    - Review DOD TMDE Options
    - Next Generation TMDE Competitive Acquisition
      - Update Measurement Requirements Specification
  - Notify TMDE Program
  - PS/E Configuration Change
  - Submit Request to update PS/E Maintenance Documentation
  - Estimated FY00&01 Cost Avoidance of $1.25M

OUR PROCESS FOCUS

- **Examples of PS/E Standard Model Assignments**

Prime System	Model Issue	SCAT Issue	Substitude Model	SCAT
R-2411/U	8660D 86601A	4396 4397	MG3641N	4370
AN/SMQ-11 AN/SMQ-11A(V)1 AN/SMQ-11A(V)2 AN/SMQ-11B AN/SMQ-11C(V)	8660D 86601A 86603A 86632B 86634A	4396 4397 4398 4399 4388	68369NV	4380
AN/GSC-39(V)	8660D 86603A 86632B	4396 4398 4399	68369NV	4380
AN/WSC-6(V)1 AN/WSC-6(V)2 AN/WSC-6(V)7 AN/WSC-6A(V)7	MG3641N MG3641N none 68369NV	4370 4370 none 4380		none none none none
AN/SRS-1(V) AN/SRS-1A(V)	8660D 86601A 86603A 86632B	4396 4397 4398 4399	MG3641N	4370
CO-H2	None	None	HWD50-1.5B-SPC401 & 80E10	4115 & 4791
AN/SLQ-20A AN/SLQ-20B	2002A-200 6100/.01-8	4378 4372	68369NV	4380
AN/USG-2	54825N	4314	54645A-E01	4308
AN/SSC-12	27/AN	4237	77-III/BN	4245

OUR PROCESS FOCUS

- **TMDE Standardization Evaluations Process**
  - Identify TMDE & SCAT Codes by Measurement Discipline (MD)
  - Assess PS/E Maintenance Requirements (MR)
    - Fleet, FTSC, TYCOM, PM, & ISEA Review
    - Preventive & Corrective
  - Assess PS/E Application Requirements (AR)
  - Assess TMDE Reliability & Maintainability Characteristics (R&M)
  - TMDE Availability Market Place Surveys (MPS)
    - Assess Measurement Discipline Options
    - Assess Industry Instrumentation Options

OUR PROCESS FOCUS

- **TMDE Standardization Evaluations Process (cont)**
  - TMDE Quantities and Economic Assessment (QEA)
    - Inventory Quantities
    - Capital Investment
    - Cost Factors
  - Group MD by MR, AR, R&M, MPS, and QEA
  - TMDE Replacement Options Assessment
    - Review TMDE SCAT Options
    - Review DOD TMDE Options
    - Next Generation TMDE
      - Update Measurement Requirements Specification
      - Select Through Formal Competitive Acquisition
      - Implement Comprehensive LCS

OUR PROCESS FOCUS

- **TMDE Standardization Evaluations Process (cont)**
  - Develop TMDE Standardization Plan
  - Submit Standardization Plan
    - NAVSEA (Budget)
    - NSWC PHD (Acquisition)
    - NSWC Earle (Allowance)
    - NSWC Corona (Cal Support)
  - Support Development of TMDE Orderly Replacement (ORTEC) Implementation Plan

OUR PROCESS FOCUS

- **Standardization Status**
  - **Completed OSCOPE Standardization Plan**
  - **Current DMM TMDE Standardization Effort**
    - **Evaluating Preventive and Corrective Maintenance (Approximately 1500 PS/E)**
    - **Quantity 35 SCAT Codes Under Review**
    - **Quantity 254 Models Under Review**
    - **Quantity 6,278 Inventory Items Under Review**